SINTEF Technical Approval

TG 20102

Issued first time: 19.09.2011
Revised: 02.06.2021
Amended: 01.03.2026
Valid until 01.04.2027

Provided listed on
www.sintefcertification.no

SINTEF confirms that

Index Mineral Helasta P4 takbelegg "Supertekk"

has been found to be fit for use in Norway and to meet the provisions regarding product documentation given in the regulation relating to the marketing of products for construction works (DOK) and regulations on technical requirements for building works (TEK), with the properties, fields of application and conditions for use as stated in this document

1. Holder of the approval

Index S.p.A.
Via G. Rossini, 22
37060 Castel d'Azzano (Verona)
Italy
www.index-spa.com

2. Product description

Index Mineral Helasta P4 takbelegg "Supertekk" (Mineral Helasta P4) is a single layer bituminous roofing membrane. It consists of SBS modified bitumen with a non-woven reinforcement of Spunbound polyester and has granules on the upper side.

The underside has a thin plastic film that will melt away during torching of the joints. Mineral Helasta P4 can be delivered in different colours. Standard colours are grey and black. The roofing membrane is based on overlapping, welded joints, and mechanical fixing.

Measures and tolerances are stated in table 1.

Table 1
Measures and tolerances for Mineral Helasta P4 according to EN 1848-1 and EN 1849-1

Property	Measure	Unit	Tolerance
Thickness	4.5	mm	± 5 %
Area weight	5.3	kg/m²	± 10 %
Width	1	m	± 1 %
Length of roll	8	m	- 0 / + 2 %
Weight of reinforcement	ca. 180	g/m²	-

3. Fields of application

Mineral Helasta P4 is used as a single layer membrane for covering pitched and flat roofs and terraces. It can also be used as a top layer in a double layer system, see SINTEF Technical Approval no. 20477. Mineral Helasta P4 can be used for new roofing or in rehabilitation. The system is designed especially for use as a mechanically fastened single layer roofing membrane, see fig. 1.

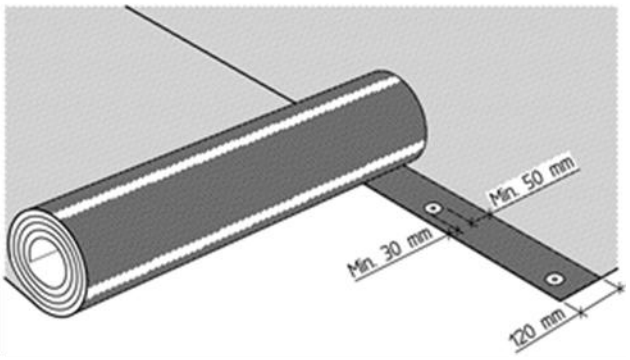

Fig. 1
Mineral Helasta P4 mechanically fastened in a 120 mm fully torched or hot air welded overlap joint.

Roofs must have adequate slope to drain water from rain and melted snow. SINTEF recommends in general a minimum slope of 1:40 for all roofs.

4. Properties

Product properties
Product properties for fresh material are shown in table 2.

Properties related to fire
Mineral Helasta P4 fulfils the requirements of class B_{ROOF} (t2) according to EN 13501-5 regarding external fire performance on substrates shown in table 3. Testing is performed according to CEN/TS 1187, test 2.

Durability
Mineral Helasta P4 has shown satisfying properties after artificial ageing in connection with type-testing and audit testing.

Fastening capacity
The design capacity for tested fasteners is given in table 4. This capacity applies to the connection between the membrane and the fastener according to EN 16002.

For weak substrates the connection between the substrate and the fastener might limit the capacity. This must be considered, and only the lowest capacity for membrane or substrates must always be used.

SINTEF Certification
www.sintefcertification.no
e-mail: certification@sintef.no

Contact, SINTEF: Bente W. Ofte
Author: Bente W. Ofte

SINTEF AS
www.sintef.no
Entreprise register: NO 919 303 808 MVA

Table 2
Product properties for fresh material of Mineral Helasta P4

Property	Test method EN	DoP [1]	Control limits [2]	SINTEF's recommended minimum performance [3]	Unit
Dimensional stability	1107-1	-	± 0.3	± 0.6	%
Flexibility at low at low temperature - upper face - lower face	1109-1	≤ -25	≤ -25	≤ -15	°C
Flow resistance at elevated temperature	1110	≥ 100	≥ 100	≥ 90	°C
Watertightness 10 kPa/24 h	1928 (A)	-	Tight [5]	Tight	-
Adhesion of granules	12039	30 %	≤ 2.5 g [4]	≤ 2.5 g [4]	-
Resistance to tearing (nail shank) L/T	12310-1	285 -30 % 400 -30 %	≥ 200 ≥ 280	≥ 150	N
Tensile strength L T	12311-1	875 -20 % 750 -20 %	≥ 700 ≥ 600	≥ 600	N/50 mm
Elongation at max load L/T	12311-1	45 -15	≥ 30	≥ 10	%
Average peel resistance of joints Sidelap/Endlap	12316-1	-	≥ 100	≥ 50	N/50 mm
Maximum peel resistance of joints [5] Sidelap/Endlap	12316-1	150 -20 %	-	-	N/50 mm
Shear resistance of joints Sidelap/Endlap	12317-1	750 -20 %	≥ 600	≥ 600	N/50 mm
Resistance to - Impact +23 °C - Impact -10 °C - Static loading	 12691 A) 12691:2001 12730 (A)	 ≥ 1000 - ≥ 20	 ≥ 1000 ≤ 10 [5] ≥ 20	 ≥ 500 ≤ 30 ≥ 20	 mm mm diam. Kg
Watertightness after stretching at low temperature (10% elongation at -10 °C)	13897	-	Tight [5]	Tight	-

[1] The manufacturers Declaration of performance, DoP.
[2] Control limits show values that the product has to satisfy during internal factory production control and audit testing.
[3] SINTEF's recommended minimum performance in SINTEF Technical Approval for single layer bituminous waterproofing.
[4] Modified to give the result of weight loss of granules in gram.
[5] Result from typetesting

L = Longitudinal T = Transversal

Table 3
Mineral Helasta P4 has fire classification B_{ROOF} (t2) on following substrates

Type of substrate	Mineral Helasta P4
EPS *	No
Stone wool	Yes
Wood particle board	Yes
Concrete / silicate plate	Yes
Reroofing on old membrane on EPS * / **	Yes
Reroofing on old membrane on stone wool	Yes
Reroofing on old membrane on wood particle board	Yes
Reroofing on old membrane on concrete / silicate plate	Yes

* In case of roofing on lightweight combustible insulation (eg EPS, XPS or PIR): See clause 6 *Special conditions for use and installation*, section *Substrate*, regarding requirements for replacement of combustible insulation to non-combustible around passages and against adjacent structures.
** See clause 6 *Special conditions for use and installation*, section *Substrate*, regarding requirements for the old roofing membrane.

Table 4
Design capacity at ultimate limit state for the attachment of Index Mineral Helasta P4 takbelegg "Supertekk"

Fastener/Fastening system fixed in minimum 120 mm welded overlap	Design Capacity [1] [2] N / fastener
Guardian R-45 plastic washer Guardian BS-4,8 steel screw (soft substrate, attachment in steel plate)	800
SFS intec RP-45 plastic washer SFS intec BS-4,8 steel screw (soft substrate, attachment in steel plate)	800

[1] Measured according to method EN 16002, safety factor γ_m=1.5 according to EAD 030351-00-0402
[2] Wind load capacity is determined using a partial factor of γ_m=1.5. During a transitional period until January 1, 2028, designers may choose to use wind load capacities recalculated with a partial factor of γ_m=1.3.

Calculation of fasteners' spacing is carried out according to SINTEF Building Research Design Guide no. 544.206 *Mekanisk feste av asfalt takbelegg og takfolie på flate tak* and "TPF informerer nr. 5" published by Takprodusentenes Forskningsgruppe (TPF), see www.tpf-info.org.

5. Environmental aspects

Substances hazardous to health and environment

Mineral Helasta P4 contains no hazardous substances with priority in quantities that pose any increased risk for human health and environment. Chemicals with priority include CMR, PBT or vPvB substances.

Effect on soil, surface water and ground water

The leaching properties of Mineral Helasta P4 are evaluated to have no negative effects on soil or water.

Waste treatment/recycling

Mineral Helasta P4 shall be sorted as residual waste. The product shall be delivered to an authorized waste treatment plant for energy recovery.

Environmental declaration

No environmental declaration (EPD) has been worked out for Mineral Helasta P4.

6. Special conditions for use and installation

Installation

Mechanical fasteners shall be placed at welded overlaps with a minimum width of 120 mm. The fasteners must be positioned at a distance from the membrane edges that provides minimum 25 mm bonding on the inside and minimum 45 mm bonding on the outside of the fastener, see fig. 2. Transverse joints must have a 150 mm overlap. The underlying corner is fastened, and the overlying corner is cut at an angle. A good result is achieved by 'drowning' the surfaces in bitumen before the joint is fully welded. Joints can be torched or hot air welded.

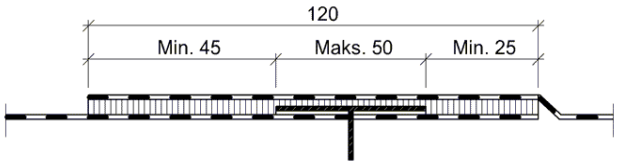

Fig. 2
Fastening of single layer bituminous roofing membrane.

The roofing membrane shall generally be installed in accordance with the vendor's installation manual and the principles shown in SINTEF Building Research Design Guide no. 544.203 *Asfalttakbelegg. Egenskaper og tekking*, 544.204 *Tekking med asfalttakbelegg eller takfolie. Detaljløsninger* and 544.206 *Mekanisk feste av asfalttakbelegg og takfolie på flate tak*, plus "TPF informerer nr. 5" published by Takprodusentenes Forskningsgruppe (TPF), see www.tpf-info.org.

Fasteners

Normal steel washers may be used in longitudinal overlapping joints on firm substrates such as wood-based roof sheathing or concrete.

On substrates of thermal insulation with compressive strength ≥ 80 kN/m² (level CS(10)80 according to EN 13162/13163) steel washers with deep collars or plastic washers should be used.

Washers with integrated sleeves and good telescopic function must be used for installation on thermal insulation with lower compression strength, and the tightening of the fasteners must particularly be checked.

Substrate

When a fire classification is required the substrate must be in accordance with the provisions stated in clause 4 regarding *Properties related to fire*.

Wooden roof sheathing must be in accordance with SINTEF Building Research Design Guide no. 525.861 about wooden roof sheathing.

In connection with re-roofing, on old bituminous roofing membrane laid on insulation of EPS, the membrane in the old roofing must fulfil the requirements of class BROOF (t2) according to EN 13501-5 on EPS. For re-roofing on old roofing that contains softeners, as for example PVC, a separate migration barrier of minimum 140 g/m² polyester felt must be used.

Substrates of combustible insulation as EPS, XPS or PIR must be covered or divided, and also replaced with non-combustible insulation around bushings and adjacent constructions according to regulations in "Veiledning om tekniske krav til byggverk" § 11-9 and further description in SINTEF Building Research Design Guide no. 525.207 *Kompakte tak* and 520.339 *Bruk av brennbar isolasjon i bygninger*, plus "TPF informerer nr. 6" Branntekniske kostruksjoner for tak published by Takprodusentenes Forskningsgruppe.

Roofing on EPS can only be used on detached houses where the roofing can be unclassified and the distance between the individual buildings is at least 8.0 m. By detached houses is meant detached houses, semi-detached houses and other low-rise buildings with a small number of people.

Traffic on the roof

Special precautionary measures should be taken to protect the roofing membrane if the roof is expected to have more traffic than is necessary for inspection and maintenance purposes only.

Cleaning and maintenance

Before starting any welding, as a part of repair work, the roofing membrane must be cleaned locally, in accordance with the manufacturer's guidelines.

Transport and storage

Mineral Helasta P4 must be stored upright on pallets or on a smooth, flat surface.

7. Factory production control

Mineral Helasta P4 is produced by Index S.p.A., Via G. Rossini 22, 37060 Castel d'Azzano (Verona), Italy.

The holder of the approval is responsible for the factory production control in order to ensure that the product is produced in accordance with the preconditions applying to this approval.

The manufacturing of the product is subject to continuous surveillance of the factory production control in accordance with the contract regarding SINTEF Technical Approval.

Index S.p.A. has a quality management system certified according to EN ISO 9001, and an environmental management system certified according to EN ISO 14001.

8. Basis for the approval

The evaluation of Index Mineral Helasta P4 is based on reports owned by the holder of the approval.

The evaluation of design and technical solutions are based on recommendations given in SINTEF Building Research Design Guides.

9. Marking

All rolls shall be marked with producer, product name and batch number.

Mineral Helasta P4 is CE marked in accordance with EN 13707.

The approval mark for SINTEF Technical Approval TG 20102 may also be used.

10. Liability

The holder/manufacturer has sole product responsibility according to existing law. Claims resulting from the use of the product cannot be brought against SINTEF beyond the provisions of Norwegian Standard NS 8402.

for SINTEF



Hans Boye Skogstad
Approval Manager